Options for bolt up brick faced steel backed units to be fixed to underside of masonry support units (supplied by others).

Header course 65mm high on face, 215mm faced soffit

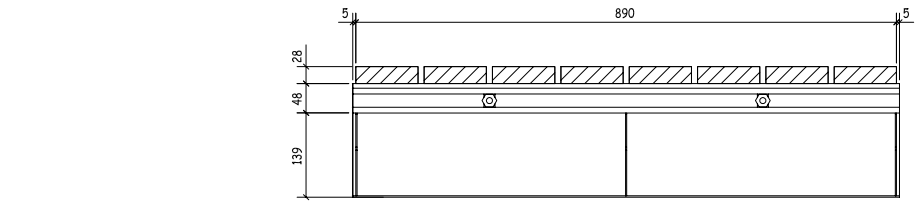

PLAN VIEW

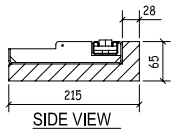

SIDE VIEW

PLEASE NOTE BRICK SLIP IS 25MM, WITH 3MM ALLOWANCE FOR BONDING.

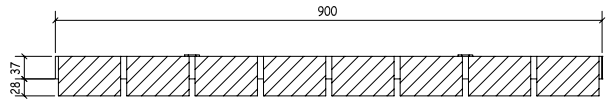

FRONT VIEW

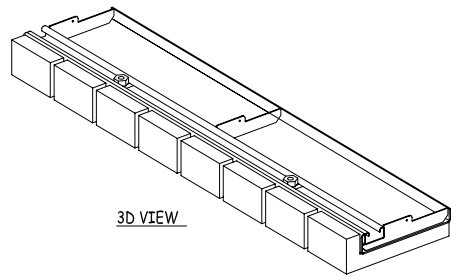

3D VIEW

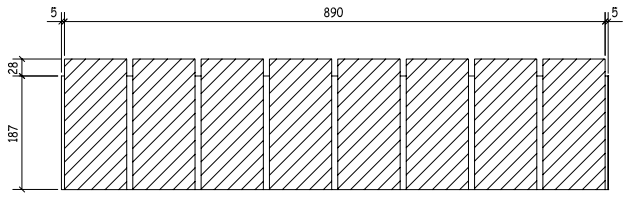

SOFFIT VIEW

Soldier course 215mm high on face, 102mm faced soffit

Section A-A - No Brick Slips

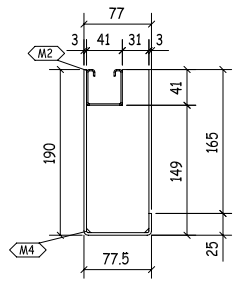

Section A-A - With Brick Slips

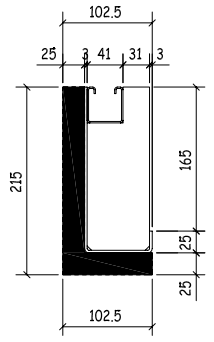

Plan View

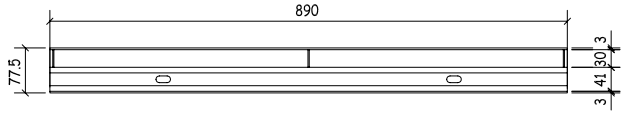

Soffit View

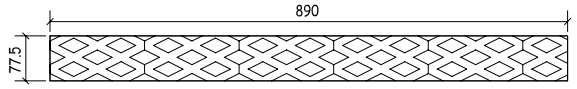

Front Elevation

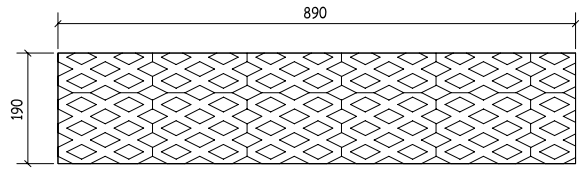

Rear Elevation

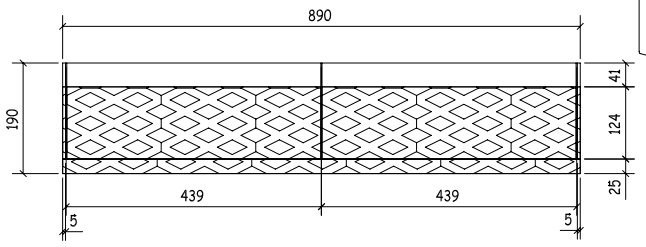

3d Rear View - No Brick Slips

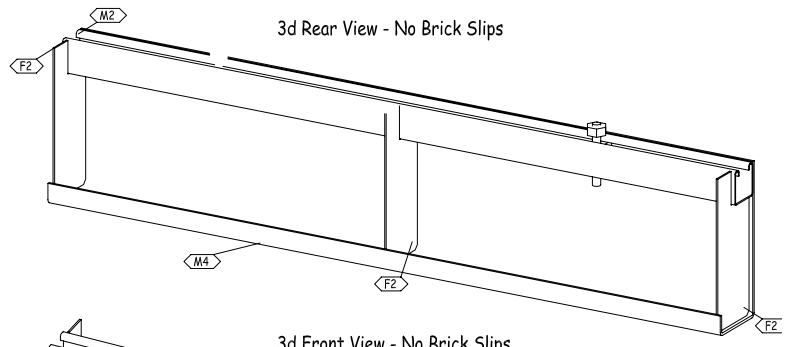

3d Front View - No Brick Slips

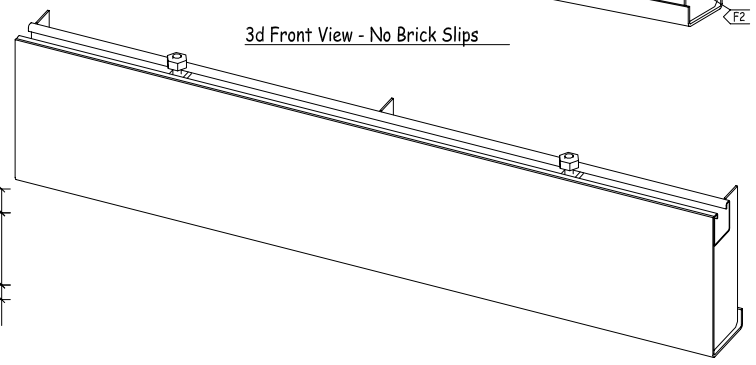

Other bond patterns, face and soffit dimensions available on request.

DISCLAIMER. FAB-LITE BUILDING SOLUTIONS LIMITED ACCEPT NO LIABILITY WITH RESPECT TO DRAWING ACCURACY OR QUANTITIES SHOWN. ALL DRAWINGS SHOULD BE APPROVED BY THE PROJECT PROFESSIONALS BEFORE PLACING ANY ORDER.

NOTES

1. DO NOT SCALE FROM THIS DRAWING

NOTE

REV	REV DATE	PURPOSE OF REVISION
-	-	-

fab-Lite BUILDING SOLUTIONS LTD
Unit MD2, Skelmanthorpe Business Park, Saville Road, Selmanthorpe, Huddersfield, HD8 9ED
Tel, 01484 865572 Fax, 01484 868834
Email: info@fab-lite.co.uk www.fab-lite.co.uk

Client .....

Project .....

Drawing Title: Typical masonry support bolt up options

Status: FOR COMMENT

Scale	As Noted at A1	DO NOT SCALE
Date	22.11.13	
Dwg NO	FBMS0001	Rev -

This drawing is not to be used in whole or part other than for the intended purpose and project as defined on this drawing.